Specifications R220LC-9A / R220NLC-9A

ENGINE

MODEL		CUMMINS QSB6.7
Type		Water cooled, 4 cycle Diesel, 6-Cylinders in line, direct injection, turbocharged, charged air cooled and low emission
Rated flywheel horse power		
SAE	J1995 (gross)	167 HP (124 kW) / 1,950 rpm
	J1349 (net)	157 HP (117 kW) / 1,950 rpm
DIN	6271/1 (gross)	169 PS (124 kW) / 1,950 rpm
	6271/1 (net)	159 PS (117 kW) / 1,950 rpm
Max. torque		74.7 kgf.m (540 lbf.ft) / 1,500 rpm
Bore x stroke		107 mm x 124 mm (4.2″ x 4.9″)
Piston displacement		6,700 cc (409 in^3)
Batteries		2 x 12 V x 100 AH
Starting motor		24 V; 4.8 kW
Alternator		24 V, 95 Amp

* This engine meets the EPA (Tier 4 interim) / EU (Stage III-B) Emission regulation.

HYDRAULIC SYSTEM

MAIN PUMP	
Type	Two variable displacement axial piston pumps
Max. flow	2 x 228.2 ℓ/min (60.3 US gpm/50.2 UK gpm)
Sub-pump for pilot circuit	Gear pump
Cross-sensing and fuel saving pump system	
HYDRAULIC MOTORS	
Travel	Two-speed axial piston motor with brake valve and parking brake
Swing	Axial piston motor with automatic brake
RELIEF VALVE SETTING	
Implement circuits	350 kgf/cm^2 (4,978 psi)
Travel	350 kgf/cm^2 (4,978 psi)
Power boost (boom, arm, bucket)	380 kgf/cm^2 (5,404 psi)
Swing circuit	265 kgf/cm^2 (3,769 psi)
Pilot circuit	40 kgf/cm^2 (568 psi)
Service valve	Installed
HYDRAULIC CYLINDERS	
No. of cylinder-bore x stroke	Boom: 2-120 x 1,290 mm (4.7″ x 50.8″)
	Arm: 1-140 x 1,510 mm (5.5″ x 59.4″)
	Bucket: 1-120 x 1,055 mm (4.7″ x 41.5″)

DRIVES & BRAKES

Drive method	Fully hydrostatic type
Drive motor	Axial piston motor, in-shoe design
Reduction system	Planetary reduction gear
Max. drawbar pull	21,100 kgf (46,500 lbf)
Max. travel speed (high) / (low)	5.7 km/h (3.5 mph) / 3.6 km/h (2.2 mph)
Gradeability	35° (70 %)
Parking brake	Multi wet disc

CONTROL

Pilot pressure operated joysticks and pedals with detachable lever provide almost effortless and fatigueless operation.

Pilot control	Two joysticks with one safety lever (LH): Swing and arm (RH): Boom and bucket (ISO)
Traveling and steering	Two levers with pedals
Engine throttle	Electric, Dial type

SWING SYSTEM

Swing motor	Fixed displacement axial piston motor
Swing reduction	Planetary gear reduction
Swing bearing lubrication	Grease-bathed
Swing brake	Multi wet disc
Swing speed	10.7 rpm

COOLANT & LUBRICANT CAPACITY

Refilling	liter	US gal	UK gal
Fuel tank	400	105.7	88.0
Engine coolant	35	9.2	7.7
Engine oil	23.7	6.3	5.2
Swing device	6	1.6	1.3
Final drive (each)	6	1.6	1.3
Hydraulic system (including tank)	275	72.6	60.5
Hydraulic tank	160	42.3	35.2

UNDERCARRIAGE

The X-leg type center frame is integrally welded with reinforced box-section track frames. The undercarriage includes lubricated rollers, idlers, track adjusters with shock absorbing springs and sprockets, and a track chain with double or triple grouser shoes.

Center frame	X - leg type
Track frame	Pentagonal box type
No. of shoes on each side	49
No. of carrier rollers on each side	2
No. of track rollers on each side	9
No. of rail guards on each side	2

OPERATING WEIGHT (APPROXIMATE)

Operating weight, including 5,680 mm (18′ 8″) boom, 2,920 mm (9′ 7″) arm, SAE heaped 0.92 m^3 (1.20 yd^3) bucket, lubricant, coolant, full fuel tank, full hydraulic tank and all standard equipments.

MAJOR COMPONENT WEIGHT	
Upperstructure	5,600 kg (12,350 lb)
Boom (with arm cylinder)	1,950 kg (4,300 lb)
Arm (with bucket cylinder)	1,095 kg (2,410 lb)

OPERATING WEIGHT

Shoes			Operating weight	Ground pressure
Type	Width mm (in)		kg (lb)	kgf/cm^2 (psi)
Triple grouser	500 (20″)	R220NLC-9A	22,000 (48,500)	0.55 (7.82)
		R220NLC-9A 2pc	22,480 (49,560)	0.56 (7.97)
	600 (24″)	R220LC-9A	21,900 (48,280)	0.46 (6.54)
		R220NLC-9A	22,350 (49,280)	0.47 (6.68)
		R220NLC-9A 2pc	22,830 (50,330)	0.48 (6.83)
		R220LC-9A H/W	23,360 (51,500)	0.50 (7.11)
		R220LC-9A LR	24,360 (53,700)	0.51 (7.25)
	700 (28″)	R220LC-9A	22,250 (49,050)	0.40 (5.69)
		R220NLC-9A	22,700 (50,050)	0.41 (5.83)
		R220NLC-9A 2pc	23,180 (51,100)	0.42 (5.98)
		R220LC-9A H/W	23,710 (52,270)	0.43 (6.11)
		R220LC-9A LR	24,710 (54,500)	0.45 (6.40)
	800 (32″)	R220LC-9A	22,515 (49,640)	0.36 (5.12)
		R220LC-9A H/W	23,975 (52,860)	0.38 (5.40)
		R220LC-9A LR	24,975 (55,050)	0.40 (5.69)
	900 (36″)	R220LC-9A	22,760 (50,180)	0.32 (4.55)
		R220LC-9A LR	25,220 (55,600)	0.36 (5.12)
Double grouser	700 (28″)	R220LC-9A H/W	24,135 (53,210)	0.43 (6.11)

BUCKETS R220LC-9A / R220LC-9A LR / R220LC-9A H/W

All buckets are welded with high-strength steel.

0.51 (0.67)

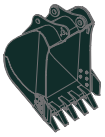
0.80 (1.05)
0.92 (1.20)

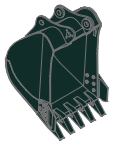
1.10 (1.44)
1.20 (1.57)

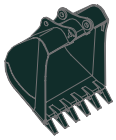
1.34 (1.75)

◈ 0.74 (0.97)
◈ 0.90 (1.18)
◈ 1.05 (1.37)

◉ 0.87 (1.14)
◉ 1.20 (1.57)

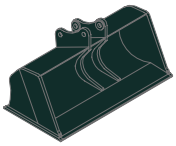
■ 0.75 (0.98)

★ 0.52 (0.68)

SAE heaped m³ (yd³)

Capacity m³ (yd³)		Width mm (in)		Weight kg (lb)	Recommendation m (ft.in)				
					5.68 (18′8″) Boom				8.2 (26′11″) Boom
SAE heaped	CECE heaped	Without side cutters	With side cutters		2.0 (6′7″) Arm	2.4 (7′10″) Arm	2.92 (9′7″) Arm	3.9 (12′10″) Arm	6.3 (20′8″) Arm
0.51 (0.67)	0.45 (0.59)	700 (27.6)	820 (32.3)	570 (1,260)	●	●	●	●	–
0.80 (1.05)	0.70 (0.92)	1,000 (39.4)	1,120 (44.1)	700 (1,540)	●	●	●	●	–
0.92 (1.20)	0.80 (1.05)	1,150 (45.3)	1,270 (50.0)	770 (1,700)	●	●	●	■	–
1.10 (1.44)	0.96 (1.26)	1,320 (52.0)	1,440 (56.7)	830 (1,830)	●	●	■	▲	–
1.20 (1.57)	1.00 (1.31)	1,400 (55.1)	1,520 (59.8)	850 (1,870)	●	■	▲	▲	–
1.34 (1.75)	1.15 (1.50)	1,550 (61.0)	1,670 (65.7)	920 (2,030)	■	■	▲	–	–
◈ 0.74 (0.97)	0.65 (0.85)	985 (38.8)	-	770 (1,700)	●	●	●	●	–
◈ 0.90 (1.18)	0.80 (1.05)	1,070 (42.1)	-	810 (1,790)	●	●	●	■	–
◈ 1.05 (1.37)	0.92 (1.20)	1,290 (50.8)	-	890 (1,960)	●	●	■	▲	–
◉ 0.87 (1.14)	0.75 (0.98)	1,140 (44.9)	-	900 (1,980)	●	●	●	■	–
◉ 1.20 (1.57)	1.00 (1.31)	1,410 (55.5)	-	1,030 (2,270)	■	▲	–	–	–
■ 0.75 (0.98)	0.65 (0.85)	1,790 (70.5)	-	880 (1,940)	●	●	■	▲	–
★ 0.52 (0.68)	0.45 (0.59)	935 (36.8)	1,035 (40.7)	460 (1,010)	–	–	–	–	■

◈ Heavy-duty bucket
◉ Heavy duty Rock-bucket
■ Slope finishing bucket
★ Long reach bucket

● : Applicable for materials with density of 2,000 kg/m³ (3,370 lb/yd³) or less
■ : Applicable for materials with density of 1,600 kg/m³ (2,700 lb/yd³) or less
▲ : Applicable for materials with density of 1,100 kg/m³ (1,850 lb/yd³) or less

ATTACHMENT R220LC-9A / R220LC-9A LR / R220LC-9A H/W

Booms and arms are welded, a low-stress, full-box section design.
5.68 m (18′8″) & 8.2 m (26′11″) Booms and 2.0 m (6′7″); 2.4 m (7′10″); 2.92 m (9′7″); 3.9 m (12′10″) & 6.3 m (20′8″) Arms are available.

DIGGING FORCE R220LC-9A / R220LC-9A LR / R220LC-9A H/W

Boom	Length	mm (ft·in)	5,680 (18′8″)				8,200 (26′11″)	Remarks
	Weight	kg (lb)	1,950 (4,300)				2,350 (5,180)	
Arm	Length	mm (ft·in)	2,000 (6′7″)	2,400 (7′10″)	2,920 (9′7″)	3,900 (12′10″)	6,300 (20′8″)	
	Weight	kg (lb)	975 (2,150)	1,045 (2,300)	1,095 (2,410)	1,295 (2,850)	1,330 (2,930)	
Bucket digging force	SAE	kN	133.4 [144.8]	133.4 [144.8]	133.4 [144.8]	133.4 [144.8]	72.6	[ ]: Power Boost
		kgf	13600 [14770]	13600 [14770]	13600 [14770]	13600 [14770]	7400	
		lbf	29980 [32550]	29980 [32550]	29980 [32550]	29980 [32550]	16310	
	ISO	kN	152.0 [165.0]	152.0 [165.0]	152.0 [165.0]	152.0 [165.0]	83.4	
		kgf	15500 [16830]	15500 [16830]	15500 [16830]	15500 [16830]	8500	
		lbf	34170 [37100]	34170 [37100]	34170 [37100]	34170 [37100]	18740	
Arm crowd force	SAE	kN	144.2 [156.5]	119.6 [129.9]	102.0 [110.7]	84.3 [91.6]	49.0	
		kgf	14700 [15960]	12200 [13250]	10400 [11290]	8600 [9340]	5000	
		lbf	32410 [35190]	26900 [29210]	22930 [24900]	18960 [20590]	11020	
	ISO	kN	151.0 [164.0]	125.5 [136.3]	106.9 [116.1]	87.3 [94.8]	50.0	
		kgf	15400 [16720]	12800 [13900]	10900 [11830]	8900 [9660]	5100	
		lbf	33950 [36860]	28220 [30640]	24030 [26090]	19620 [21300]	11240	

Note: Boom weight includes arm cylinder, piping and pin.
Arm weight includes bucket cylinder, linkage and pin.

BUCKETS R220NLC-9A

All buckets are welded with high-strength steel.

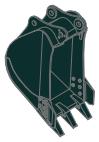

0.51 (0.67)

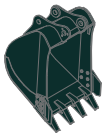

0.80 (1.05)
0.87 (1.14)
0.92 (1.20)

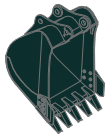

1.10 (1.44)
1.20 (1.57)

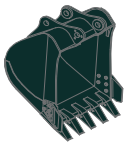

1.34 (1.75)

▣ 0.74 (0.97)
▣ 0.90 (1.18)
▣ 1.05 (1.37)

◉ 0.87 (1.14)

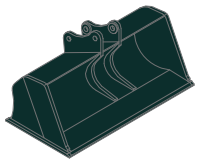

★ 0.75 (0.98)

SAE heaped m^3 (yd^3)

Capacity m^3 (yd^3)		Width mm (in)		Weight kg (lb)	Recommendation m (ft.in)				
					5.65 (18′6″) Mono boom			5.65 (18′6″) Hydraulic adjustable boom	
SAE heaped	CECE heaped	Without side cutters	With side cutters		2.00 (6′7″) Arm	2.40 (7′10″) Arm	2.92 (9′7″) Arm	2.00 (6′7″) Arm	2.40 (7′10″) Arm
0.51 (0.67)	0.45 (0.59)	700 (27.6)	820 (32.3)	570 (1,260)	●	●	●	●	●
0.80 (1.05)	0.70 (0.92)	1,000 (39.4)	1,120 (44.1)	700 (1,540)	●	●	●	●	●
0.87 (1.14)	0.75 (0.98)	1,090 (42.9)	1,210 (47.6)	740 (1,630)	●	●	■	●	●
0.92 (1.20)	0.80 (1.05)	1,150 (45.3)	1,270 (50.0)	770 (1,700)	●	●	■	●	●
1.10 (1.44)	0.96 (1.26)	1,320 (52.0)	1,440 (56.7)	830 (1,830)	■	▲	▲	■	▲
1.20 (1.57)	1.00 (1.31)	1,400 (55.1)	1,520 (59.8)	850 (1,870)	■	▲	–	■	▲
1.34 (1.75)	1.15 (1.50)	1,550 (61.0)	1,670 (65.7)	920 (2,030)	▲	▲	–	▲	▲
▣ 0.74 (0.97)	0.65 (0.85)	985 (38.8)	-	770 (1,700)	●	●	●	●	●
▣ 0.90 (1.18)	0.80 (1.05)	1,070 (42.0)	-	810 (1,790)	●	●	■	●	●
▣ 1.05 (1.37)	0.92 (1.20)	1,290 (50.8)	-	890 (1,960)	■	▲	–	■	▲
◉ 0.87 (1.14)	0.75 (0.98)	1,140 (44.9)	-	900 (1,980)	●	●	■	●	●
★ 0.75 (0.98)	0.65 (0.85)	1,790 (70.5)	-	880 (1,940)	●	●	■	●	●

▣ Heavy-duty bucket
◉ Heavy duty Rock-bucket
★ Slope finishing bucket

● : Applicable for materials with density of 2,000 kg/m^3 (3,370 lb/yd^3) or less
■ : Applicable for materials with density of 1,600 kg/m^3 (2,700 lb/yd^3) or less
▲ : Applicable for materials with density of 1,100 kg/m^3 (1,850 lb/yd^3) or less

ATTACHMENT R220NLC-9A

Booms and arms are welded, a low-stress, full-box section design.
5.65 m (18′6″) mono boom, 5.65 m (18′6″) hydraulic adjustable boom and 2.00 m (6′7″); 2.40 m (7′10″) and 2.92 m (9′7″) arms are available.

DIGGING FORCE R220NLC-9A

Boom	Length	mm (ft·in)	5,650 (18′6″)			Remarks
	Weight	kg (lb)	1,950 (4,300)			
Arm	Length	mm (ft·in)	2,000 (6′7″)	2,400 (7′10″)	2,920 (9′7″)	
	Weight	kg (lb)	975 (2,150)	1,045 (2,300)	1,095 (2,410)	
Bucket digging force	SAE	kN	130.4 [141.6]	130.4 [141.6]	130.4 [141.6]	[ ]: Power Boost
		kgf	13,300 [14,440]	13,300 [14,440]	13,300 [14,440]	
		lbf	29,320 [31,830]	29,320 [31,830]	29,320 [31,830]	
	ISO	kN	149.1 [161.8]	149.1 [161.8]	149.1 [161.8]	
		kgf	15,200 [16,500]	15,200 [16,500]	15,200 [16,500]	
		lbf	33,510 [36,380]	33,510 [36,380]	33,510 [36,380]	
Arm crowd force	SAE	kN	144.2 [156.5]	119.6 [129.9]	102.0 [110.7]	
		kgf	14,700 [15,960]	12,200 [13,250]	10,400 [11,290]	
		lbf	32,410 [35,190]	26,900 [29,210]	22,930 [24,900]	
	ISO	kN	151.0 [164.0]	125.5 [136.3]	106.9 [116.1]	
		kgf	15,400 [16,720]	12,800 [13,900]	10,900 [11,830]	
		lbf	33,950 [36,860]	28,220 [30,640]	24,030 [26,090]	

Note: Boom weight includes arm cylinder, piping and pin.
Arm weight includes bucket cylinder, linkage and pin.

Dimensions & Working Ranges

DIMENSIONS R220LC-9A / R220LC-9A LR

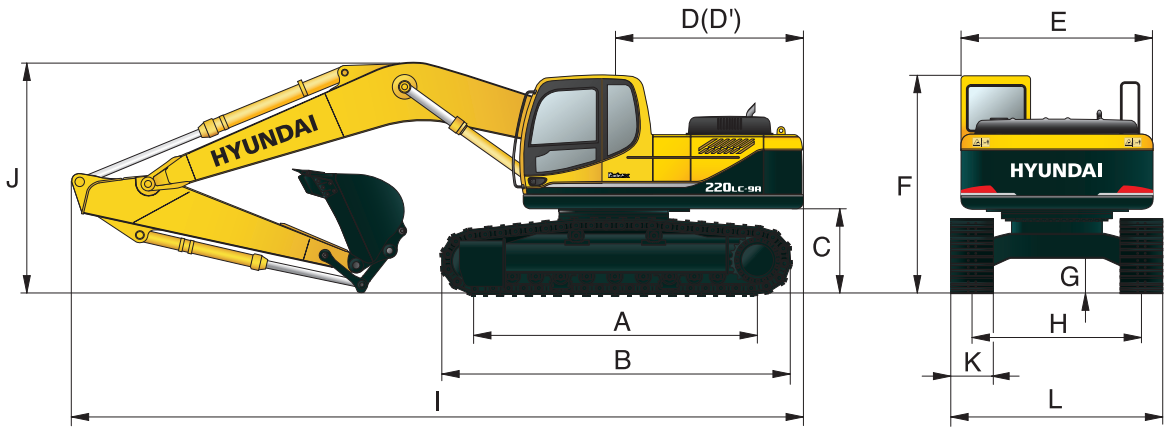

mm (ft · in)

A	Tumbler distance	3,650 (11′ 12″)
B	Overall length of crawler	4,440 (14′ 7″)
C	Ground clearance of counterweight	1,060 (3′ 6″)
D	Tail swing radius	2,840 (9′ 4″)
D′	Rear-end length	2,770 (9′ 1″)
E	Overall width of upperstructure	2,740 (8′ 12″)
F	Overall height of cab	2,920 (9′ 7″)
G	Min. ground clearance	480 (1′ 7″)
H	Track gauge	2,390 (7′ 10″)

mm (ft · in)

	Boom length	5,680 (18′ 8″)			8,200 (26′ 11″)
	Arm length	2,000 (6′ 7″)	2,400 (7′ 10″)	2,920 (9′ 7″)	3,900 (12′ 10″)	6,300 (20′ 8″)
I	Overall length	9,650 (31′ 8″)	9,570 (31′ 5″)	9,530 (31′ 3″)	9,520 (31′ 3″)	12,030 (39′ 6″)
J	Overall height of boom	3,200 (10′ 6″)	3,110 (10′ 2″)	3,030 (9′ 11″)	3,480 (11′ 5″)	3,280 (10′ 9″)

K	Track shoe width	600 (24″)	700 (28″)	800 (32″)	900 (36″)
L	Overall width	2,990 (9′ 10″)	3,090 (10′ 2″)	3,190 (10′ 6″)	3,290 (10′ 10″)

WORKING RANGES R220LC-9A / R220LC-9A LR

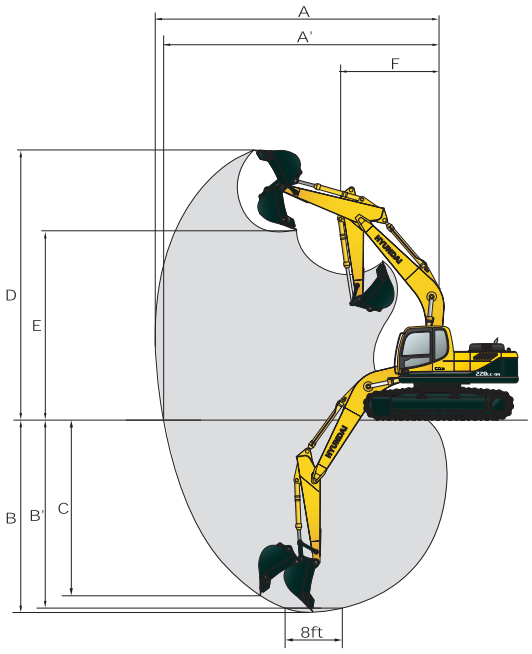

mm (ft · in)

	Boom length	5,680 (18′ 8″)			8,200 (26′ 11″)
	Arm length	2,000 (6′ 7″)	2,400 (7′ 10″)	2,920 (9′ 7″)	3,900 (12′ 10″)	6,300 (20′ 8″)
A	Max. digging reach	9,140 (29′ 12″)	9,500 (31′ 2″)	9,980 (32′ 9″)	10,910 (35′ 10″)	15,220 (49′ 11″)
A′	Max. digging reach on ground	8,960 (29′ 5″)	9,330 (30′ 7″)	9,820 (32′ 3″)	10,770 (35′ 4″)	15,120 (49′ 7″)
B	Max. digging depth	5,820 (19′ 1″)	6,220 (20′ 5″)	6,730 (22′ 1″)	7,720 (25′ 4″)	11,760 (38′ 7″)
B′	Max. digging depth (8′ level)	5,580 (18′ 4″)	6,010 (19′ 9″)	6,560 (21′ 6″)	7,580 (24′ 10″)	11,650 (38′ 3″)
C	Max. vertical wall digging depth	5,280 (17′ 4″)	5,720 (18′ 9″)	6,280 (20′ 7″)	7,240 (23′ 9″)	9,610 (31′ 6″)
D	Max. digging height	9,140 (29′ 12″)	9,340 (30′ 8″)	9,600 (31′ 6″)	10,110 (33′ 2″)	12,550 (41′ 2″)
E	Max. dumping height	6,330 (20′ 9″)	6,520 (21′ 5″)	6,780 (22′ 3″)	7,290 (23′ 11″)	10,280 (33′ 9″)
F	Min. front swing radius	3,750 (12′ 4″)	3,740 (12′ 3″)	3,740 (12′ 3″)	3,650 (11′ 12″)	4,870 (15′ 12″)

Dimensions & Working Ranges

DIMENSIONS R220NLC-9A

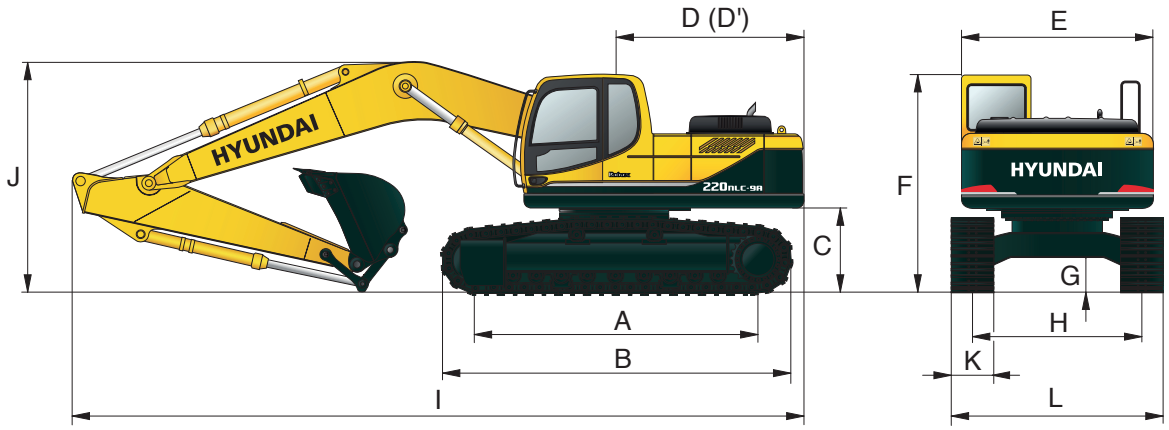

mm (ft · in)

A	Tumbler distance	3,650 (12′ 0″)
B	Overall length of crawler	4,440 (14′ 7″)
C	Ground clearance of counterweight	1,060 (3′ 6″)
D	Tail swing radius	2,800 (9′ 2″)
D′	Rear-end length	2,770 (9′ 1″)
E	Overall width of upperstructure	2,530 (8′ 4″)
F	Overall height of cab	2,920 (9′ 7″)
G	Min. ground clearance	480 (1′ 7″)
H	Track gauge	2,000 (6′ 7″)

mm (ft · in)

	Boom length	5,650 (18′ 6″)		
	Arm length	2,000 (6′ 7″)	2,400 (7′ 10″)	2,920 (9′ 7″)
I	Overall length	9,650 (31′ 8″)	9,570 (31′ 5″)	9,510 (31′ 2″)
J	Overall height of boom	3,250 (10′ 8″)	3,170 (10′ 5″)	3,100 (10′ 2″)
K	Track shoe width	500 (20″)	600 (24″)	700 (28″)
L	Overall width	2,500 (8′ 2″)	2,600 (8′ 6″)	2,700 (8′ 9″)

WORKING RANGES R220NLC-9A

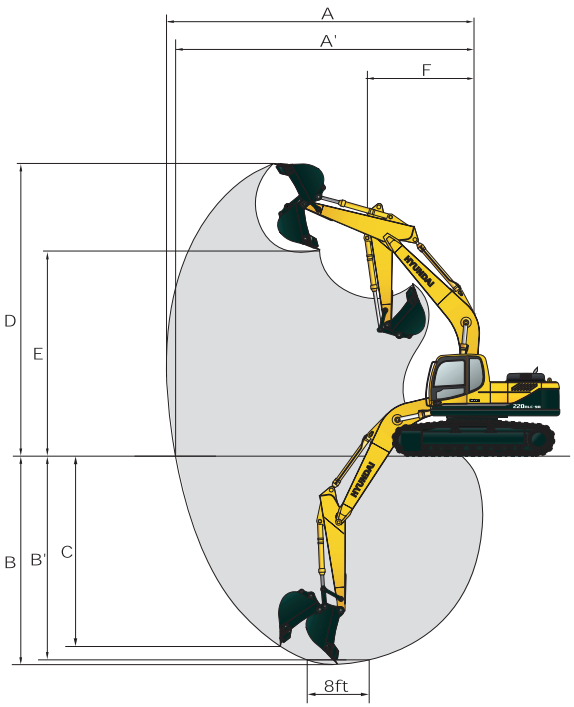

mm (ft · in)

	Boom length	5,650 (18′ 6″)		
	Arm length	2,000 (6′ 7″)	2,400 (7′ 10″)	2,920 (9′ 7″)
A	Max. digging reach	9,140 (29′ 12″)	9,510 (31′ 2″)	9,960 (32′ 8″)
A′	Max. digging reach on ground	8,960 (29′ 5″)	9,340 (30′ 8″)	9,800 (32′ 2″)
B	Max. digging depth	5,750 (18′ 10″)	6,150 (20′ 2″)	6,640 (21′ 9″)
B′	Max. digging depth (8′ level)	5,520 (18′ 1″)	5,950 (19′ 6″)	6,470 (21′ 3″)
C	Max. vertical wall digging depth	5,320 (17′ 5″)	5,780 (19′ 0″)	6,250 (20′ 6″)
D	Max. digging height	9,270 (30′ 5″)	9,500 (31′ 2″)	9,740 (31′ 11″)
E	Max. dumping height	6,450 (21′ 2″)	6,660 (21′ 10″)	6,900 (22′ 8″)
F	Min. front swing radius	3,710 (12′ 2″)	3,630 (11′ 11″)	3,580 (11′ 9″)

Dimensions & Working Ranges

DIMENSIONS R220NLC-9A - HYDRAULIC ADJUSTABLE BOOM

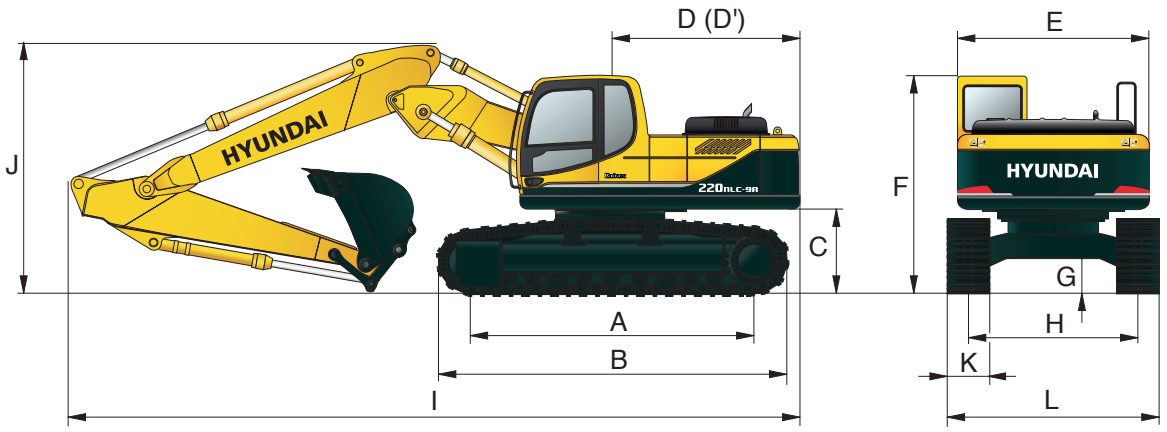

mm (ft · in)

A	Tumbler distance	3,650 (12′ 0″)
B	Overall length of crawler	4,440 (14′ 7″)
C	Ground clearance of counterweight	1,060 (3′ 6″)
D	Tail swing radius	2,800 (9′ 2″)
D′	Rear-end length	2,770 (9′ 1″)
E	Overall width of upperstructure	2,530 (8′ 4″)
F	Overall height of cab	2,920 (9′ 7″)
G	Min. ground clearance	480 (1′ 7″)
H	Track gauge	2,000 (6′ 7″)

mm (ft · in)

	Boom length	5,650 (18′ 6″)	
	Arm length	2,000 (6′ 7″)	2,400 (7′ 10″)
I	Overall length	9,620 (31′ 7″)	9,550 (31′ 4″)
J	Overall height of boom	3,050 (10′ 0″)	3,000 (9′ 10″)

K	Track shoe width	500 (20″)	600 (24″)	700 (28″)
L	Overall width	2,500 (8′ 2″)	2,600 (8′ 6″)	2,700 (8′ 9″)

WORKING RANGES R220NLC-9A - HYDRAULIC ADJUSTABLE BOOM

mm (ft · in)

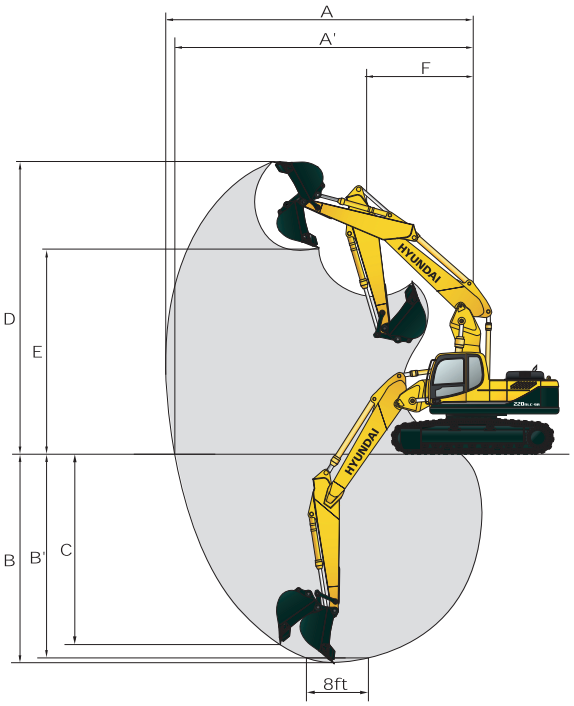

	Boom length	5,650 (18′ 6″)	
	Arm length	2,000 (6′ 7″)	2,400 (7′ 10″)
A	Max. digging reach	9,120 (29′ 11″)	9,530 (31′ 3″)
A′	Max. digging reach on ground	8,940 (29′ 4″)	9,360 (30′ 9″)
B	Max. digging depth	5,480 (17′ 12″)	5,890 (19′ 4″)
B′	Max. digging depth (8′ level)	5,360 (17′ 7″)	5,770 (18′ 11″)
C	Max. vertical wall digging depth	4,560 (14′ 12″)	4,990 (16′ 4″)
D	Max. digging height	10,300 (33′ 10″)	10,670 (35′ 0″)
E	Max. dumping height	7,390 (24′ 3″)	7,740 (25′ 5″)
F	Min. front swing radius	2,870 (9′ 5″)	2,670 (8′ 9″)

Dimensions & Working Ranges

DIMENSIONS R220LC-9A HIGH WALKER

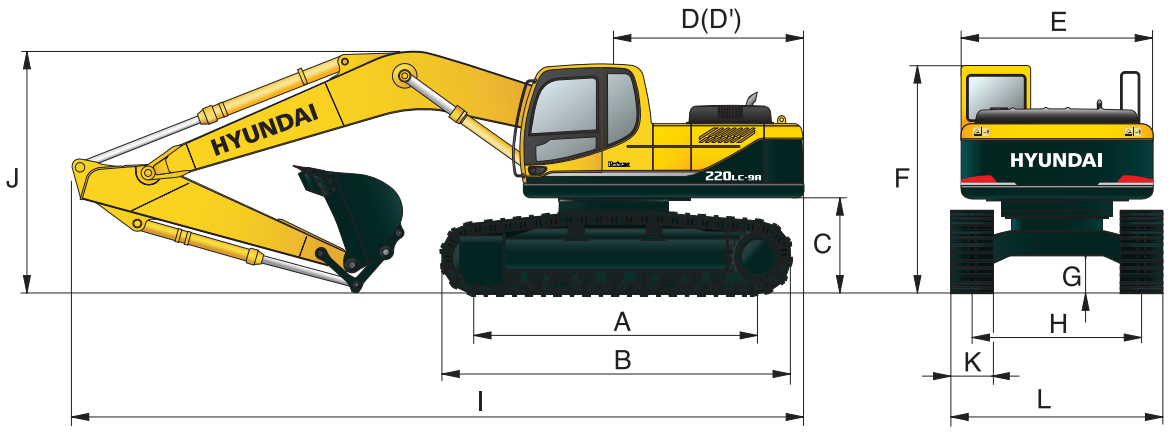

mm (ft · in)

A	Tumbler distance	3,650 (11′ 12″)
B	Overall length of crawler	4,440 (14′ 7″)
C	Ground clearance of counterweight	1,240 (4′ 1″)
D	Tail swing radius	2,840 (9′ 4″)
D′	Rear-end length	2,770 (9′ 1″)
E	Overall width of upperstructure	2,740 (8′ 12″)
F	Overall height of cab	3,100 (10′ 2″)
G	Min. ground clearance	660 (2′ 2″)
H	Track gauge	2,790 (9′ 2″)

mm (ft · in)

	Boom length	5,680 (18′ 8″)			
	Arm length	2,000 (6′ 7″)	2,400 (7′ 10″)	2,920 (9′ 7″)	3,900 (12′ 10″)
I	Overall length	9,650 (31′ 8″)	9,550 (31′ 4″)	9,470 (31′ 1″)	9,560 (31′ 4″)
J	Overall height of boom	3,290 (10′ 10″)	3,170 (10′ 5″)	3,060 (10′ 0″)	3,450 (11′ 4″)

K	Track shoe width	Type	Triple grouser			Double grouser
		Width	600 (24″)	700 (28″)	800 (32″)	710 (28″)
L	Overall width		3,395 (11′ 2″)	3,495 (11′ 6″)	3,595 (11′ 10″)	3,505 (11′ 6″)

WORKING RANGES R220LC-9A HIGH WALKER

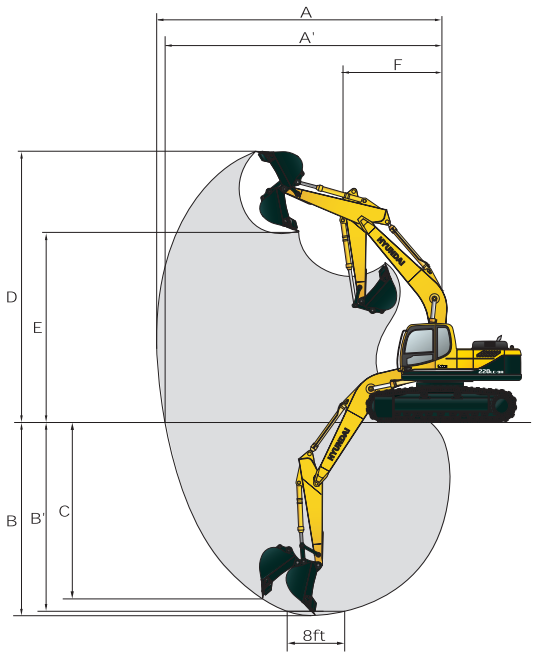

mm (ft · in)

	Boom length	5,680 (18′ 8″)			
	Arm length	2,000 (6′ 7″)	2,400 (7′ 10″)	2,920 (9′ 7″)	3,900 (12′ 10″)
A	Max. digging reach	9,140 (29′ 12″)	9,500 (31′ 2″)	9,980 (32′ 9″)	10,910 (35′ 10″)
A′	Max. digging reach on ground	8,920 (29′ 3″)	9,290 (30′ 6″)	9,820 (32′ 3″)	10,730 (35′ 2″)
B	Max. digging depth	5,630 (18′ 6″)	6,010 (19′ 9″)	6,550 (21′ 6″)	7,530 (24′ 8″)
B′	Max. digging depth (8′ level)	5,390 (17′ 8″)	5,820 (19′ 1″)	6,380 (20′ 11″)	7,390 (24′ 3″)
C	Max. vertical wall digging depth	5,090 (16′ 8″)	5,630 (18′ 6″)	6,100 (20′ 0″)	7,050 (23′ 2″)
D	Max. digging height	9,330 (30′ 7″)	9,530 (31′ 3″)	9,780 (32′ 1″)	10,300 (33′ 10″)
E	Max. dumping height	6,520 (21′ 5″)	6,710 (22′ 0″)	6,960 (22′ 10″)	7,480 (24′ 6″)
F	Min. front swing radius	3,750 (12′ 4″)	3,740 (12′ 3″)	3,740 (12′ 3″)	3,650 (11′ 12″)

Lifting Capacities

R220LC-9A

Rating over-front Rating over-side or 360 degrees

Boom : 5.68 m (18′ 8″) / Arm : 2.0 m (6′ 7″) / Bucket : 0.92 m³ (1.20 yd³) SAE heaped / Shoe : 600 mm (24″) triple grouser

Load point height m (ft)		Load radius								At max. reach		
		3.0 m (10 ft)		4.5 m (15 ft)		6.0 m (20 ft)		7.5 m (25 ft)		Capacity		Reach
												m (ft)
7.5 m	kg									*4010	*4010	6.65
(25 ft)	lb									*8840	*8840	(21.8)
6.0 m	kg					*4440	*4440			*4060	3040	7.78
(20 ft)	lb					*9790	*9790			*8950	6700	(25.5)
4.5 m	kg			*5730	*5730	*4860	4630			*4190	2540	8.43
(15 ft)	lb			*12630	*12630	*10710	10210			*9240	5600	(27.7)
3.0 m	kg			*7460	6840	*5610	4370	*4830	3000	4040	2310	8.74
(10 ft)	lb			*16450	15080	*12370	9630	*10650	6610	8910	5090	(28.7)
1.5 m	kg			*8990	6320	*6390	4120	5060	2890	3990	2260	8.73
(5 ft)	lb			*19820	13930	*14090	9080	11160	6370	8800	4980	(28.6)
Ground	kg			*9690	6090	*6910	3950	4980	2810	4200	2380	8.42
Line	lb			*21360	13430	*15230	8710	10980	6190	9260	5250	(27.6)
-1.5 m	kg	*13990	12260	*9630	6070	*6990	3910			4820	2750	7.76
(-5 ft)	lb	*30840	27030	*21230	13380	*15410	8620			10630	6060	(25.5)
-3.0 m	kg	*12500	12500	*8820	6180	*6350	3990			*4850	3650	6.61
(-10 ft)	lb	*27560	27560	*19440	13620	*14000	8800			*10690	8050	(21.7)
-4.5 m	kg	*9460	*9460									
(-15 ft)	lb	*20860	*20860									

Boom : 5.68 m (18′ 8″) / Arm : 2.40 m (7′ 10″) / Bucket : 0.92 m³ (1.20 yd³) SAE heaped / Shoe : 600 mm (24″) triple grouser

Load point height m (ft)		Load radius										At max. reach		
		1.5 m (5 ft)		3.0 m (10 ft)		4.5 m (15 ft)		6.0 m (20 ft)		7.5 m (25 ft)		Capacity		Reach
														m (ft)
7.5 m	kg											*3700	3640	7.15
(25 ft)	lb											*8160	8020	(23.5)
6.0 m	kg							*4010	*4010			*3780	2760	8.20
(20 ft)	lb							*8840	*8840			*8330	6080	(26.9)
4.5 m	kg							*4490	*4490	*4230	3130	*3900	2340	8.82
(15 ft)	lb							*9900	*9900	*9330	6900	*8600	5160	(28.9)
3.0 m	kg					*6900	*6900	*5280	4400	*4560	3010	3760	2130	9.11
(10 ft)	lb					*15210	*15210	*11640	9700	*10050	6640	8290	4700	(29.9)
1.5 m	kg					*8560	6380	*6120	4130	*4970	2880	3710	2080	9.10
(5 ft)	lb					*18870	14070	*13490	9110	*10960	6350	8180	4590	(29.9)
Ground	kg			*8790	*8790	*9490	6080	*6740	3930	4950	2780	3890	2180	8.81
Line	lb			*19380	*19380	*20920	13400	*14860	8660	10910	6130	8580	4810	(28.9)
-1.5 m	kg	*9760	*9760	*13510	12060	*9650	6000	*6960	3850			4390	2480	8.18
(-5 ft)	lb	*21520	*21520	*29780	26590	*21270	13230	*15340	8490			9680	5470	(26.8)
-3.0 m	kg	*14150	*14150	*13240	12280	*9090	6080	*6590	3900			*4700	3190	7.12
(-10 ft)	lb	*31200	*31200	*29190	27070	*20040	13400	*14530	8600			*10360	7030	(23.4)
-4.5 m	kg			*10630	*10630	*7400	6330							
(-15 ft)	lb			*23440	*23440	*16310	13960							

Boom : 5.68 m (18′ 8″) / Arm : 2.92 m (9′ 7″) / Bucket : 0.92 m³ (1.20 yd³) SAE heaped / Shoe : 600 mm (24″) triple grouser

Load point height m (ft)		Load radius										At max. reach		
		1.5 m (5 ft)		3.0 m (10 ft)		4.5 m (15 ft)		6.0 m (20 ft)		7.5 m (25 ft)		Capacity		Reach
														m (ft)
7.5 m	kg											*3360	3150	7.78
(25 ft)	lb											*7410	6940	(25.5)
6.0 m	kg									*2340	*2340	*3450	2460	8.74
(20 ft)	lb									*5160	*5160	*7610	5420	(28.7)
4.5 m	kg							*4010	*4010	*3830	3180	*3580	2100	9.32
(15 ft)	lb							*8840	*8840	*8440	7010	*7890	4630	(30.6)
3.0 m	kg			*9780	*9780	*6150	*6150	*4840	4460	*4230	3040	3440	1930	9.59
(10 ft)	lb			*21560	*21560	*13560	*13560	*10670	9830	*9330	6700	7580	4250	(31.5)
1.5 m	kg			*8810	*8810	*7960	6490	*5750	4160	*4710	2880	3390	1880	9.59
(5 ft)	lb			*19420	*19420	*17550	14310	*12680	9170	*10380	6350	7470	4140	(31.5)
Ground	kg			*9550	*9550	*9160	6090	*6490	3920	4930	2750	3520	1950	9.31
Line	lb			*21050	*21050	*20190	13430	*14310	8640	10870	6060	7760	4300	(30.5)
-1.5 m	kg	*8810	*8810	*12610	11870	*9600	5940	*6870	3800	4860	2690	3920	2190	8.72
(-5 ft)	lb	*19420	*19420	*27800	26170	*21160	13100	*15150	8380	10710	5930	8640	4830	(28.6)
-3.0 m	kg	*12190	*12190	*13980	12040	*9320	5960	*6740	3800			*4460	2710	7.75
(-10 ft)	lb	*26870	*26870	*30820	26540	*20550	13140	*14860	8380			*9830	5970	(25.4)
-4.5 m	kg			*11860	*11860	*8120	6140					*4330	4080	6.16
(-15 ft)	lb			*26150	*26150	*17900	13540					*9550	8990	(20.2)

1. Lifting capacity is based on SAE J1097, ISO 10567.
2. Lifting capacity of the Robex Series does not exceed 75% of the tipping load with the machine on firm, level ground or 87% of full hydraulic capacity.
3. The load point is a hook located on the back of the bucket.
4. (*) indicates the load limited by hydraulic capacity.

Lifting Capacities

R220LC-9A

Rating over-front Rating over-side or 360 degrees

Boom : 5.68 m (18′ 8″) / Arm : 3.90 m (12′ 10″) / Bucket : 0.92 m³ (1.20 yd³) SAE heaped / Shoe : 600 mm (24″) triple grouser

Load point height m (ft)		Load radius												At max. reach		
		1.5 m (5 ft)		3.0 m (10 ft)		4.5 m (15 ft)		6.0 m (20 ft)		7.5 m (25 ft)		9.0 m (30 ft)		Capacity		Reach
																m (ft)
9.0 m	kg													*2740	*2740	7.66
(30 ft)	lb													*6040	*6040	(25.1)
7.5 m	kg									*1980	*1980			*2800	2420	8.94
(25 ft)	lb									*4370	*4370			*6170	5340	(29.3)
6.0 m	kg									*2840	*2840			*2900	1960	9.77
(20 ft)	lb									*6260	*6260			*6390	4320	(32.1)
4.5 m	kg									*3090	*3090	*2040	*2040	*3020	1700	10.28
(15 ft)	lb									*6810	*6810	*4500	*4500	*6660	3750	(33.7)
3.0 m	kg							*3940	*3940	*3560	3080	*2910	2140	2890	1560	10.52
(10 ft)	lb							*8690	*8690	*7850	6790	*6420	4720	6370	3440	(34.5)
1.5 m	kg			*11130	*11130	*6640	*6640	*4950	4220	*4120	2880	*3450	2040	2840	1510	10.52
(5 ft)	lb			*24540	*24540	*14640	*14640	*10910	9300	*9080	6350	*7610	4500	6260	3330	(34.5)
Ground	kg	*5260	*5260	*10600	*10600	*8250	6130	*5860	3910	*4650	2710	*3530	1950	2930	1550	10.27
Line	lb	*11600	*11600	*23370	*23370	*18190	13510	*12920	8620	*10250	5970	*7780	4300	6460	3420	(33.7)
-1.5 m	kg	*7500	*7500	*11650	11540	*9150	5810	*6490	3700	4750	2590	*2370	1900	3180	1700	9.75
(-5 ft)	lb	*16530	*16530	*25680	25440	*20170	12810	*14310	8160	10470	5710	*5220	4190	7010	3750	(32.0)
-3.0 m	kg	*9990	*9990	*14350	11540	*9360	5720	*6700	3620	4710	2550			3710	2030	8.91
(-10 ft)	lb	*22020	*22020	*31640	25440	*20640	12610	*14770	7980	10380	5620			8180	4480	(29.2)
-4.5 m	kg	*12960	*12960	*13360	11780	*8830	5800	*6340	3670					*4030	2730	7.62
(-15 ft)	lb	*28570	*28570	*29450	25970	*19470	12790	*13980	8090					*8880	6020	(25.0)
-6.0 m	kg			*10610	*10610	*7100	6080									
(-20 ft)	lb			*23390	*23390	*15650	13400									

R220LC-9A HIGH WALKER

Rating over-front Rating over-side or 360 degrees

Boom : 5.68 m (18′ 8″) / Arm : 2.40 m (7′ 10″) / Bucket : 0.92 m³ (1.20 yd³) SAE heaped / Shoe : 600 mm (24″) triple grouser

Load point height m (ft)		Load radius										At max. reach		
		1.5 m (5 ft)		3.0 m (10 ft)		4.5 m (15 ft)		6.0 m (20 ft)		7.5 m (25 ft)		Capacity		Reach
														m (ft)
7.5 m	kg											*3700	*3700	7.31
(25 ft)	lb											*8160	*8160	(24.0)
6.0 m	kg							*4050	*4050			*3790	3480	8.30
(20 ft)	lb							*8930	*8930			*8360	7670	(27.2)
4.5 m	kg					*5360	*5360	*4580	*4580	*4260	4030	*3920	3020	8.87
(15 ft)	lb					*11820	*11820	*10100	*10100	*9390	8880	*8640	6660	(29.1)
3.0 m	kg					*7130	*7130	*5390	*5390	*4610	3900	4010	2810	9.12
(10 ft)	lb					*15720	*15720	*11880	*11880	*10160	8600	8840	6190	(29.9)
1.5 m	kg					*8720	8370	*6220	5360	*5020	3770	3990	2780	9.08
(5 ft)	lb					*19220	18450	*13710	11820	*11070	8310	8800	6130	(29.8)
Ground	kg			*9350	*9350	*9550	8080	*6790	5170	5290	3670	4210	2940	8.75
Line	lb			*20610	*20610	*21050	17810	*14970	11400	11660	8090	9280	6480	(28.7)
-1.5 m	kg	*10290	*10290	*14180	*14180	*9620	8020	*6950	5100			*4650	3360	8.07
(-5 ft)	lb	*22690	*22690	*31260	*31260	*21210	17680	*15320	11240			*10250	7410	(26.5)
-3.0 m	kg	*14760	*14760	*12990	*12990	*8950	8120	*6470	5170			*4690	4350	6.94
(-10 ft)	lb	*32540	*32540	*28640	*28640	*19730	17900	*14260	11400			*10340	9590	(22.8)
-4.5 m	kg			*10150	*10150	*7020	*7020							
(-15 ft)	lb			*22380	*22380	*15480	*15480							

Boom : 5.68 m (18′ 8″) / Arm : 2.92 m (9′ 7″) / Bucket : 0.92 m³ (1.20 yd³) SAE heaped / Shoe : 600 mm (24″) triple grouser

Load point height m (ft)		Load radius										At max. reach		
		1.5 m (5 ft)		3.0 m (10 ft)		4.5 m (15 ft)		6.0 m (20 ft)		7.5 m (25 ft)		Capacity		Reach
														m (ft)
7.5 m	kg											*3370	*3370	7.93
(25 ft)	lb											*7430	*7430	(26.0)
6.0 m	kg									*2700	*2700	*3460	3130	8.83
(20 ft)	lb									*5950	*5950	*7630	6900	(29.0)
4.5 m	kg							*4110	*4110	*3870	*3870	*3600	2740	9.37
(15 ft)	lb							*9060	*9060	*8530	*8530	*7940	6040	(30.7)
3.0 m	kg			*10440	*10440	*6400	*6400	*4960	*4960	*4290	3930	3680	2560	9.60
(10 ft)	lb			*23020	*23020	*14110	*14110	*10930	*10930	*9460	8660	8110	5640	(31.5)
1.5 m	kg			*8610	*8610	*8150	*8150	*5860	5380	*4760	3770	3650	2530	9.57
(5 ft)	lb			*18980	*18980	*17970	*17970	*12920	11860	*10490	8310	8050	5580	(31.4)
Ground	kg			*9870	*9870	*9260	8080	*6560	5150	*5150	3640	3820	2650	9.25
Line	lb			*21760	*21760	*20410	17810	*14460	11350	*11350	8020	8420	5840	(30.3)
-1.5 m	kg	*9210	*9210	*13090	*13090	*9600	7940	*6880	5040	5200	3590	4280	2980	8.62
(-5 ft)	lb	*20300	*20300	*28860	*28860	*21160	17500	*15170	11110	11460	7910	9440	6570	(28.3)
-3.0 m	kg	*12660	*12660	*13780	*13780	*9230	7990	*6670	5060			*4470	3710	7.59
(-10 ft)	lb	*27910	*27910	*30380	*30380	*20350	17610	*14700	11160			*9850	8180	(24.9)
-4.5 m	kg			*11470	*11470	*7860	*7860					*4250	*4250	5.89
(-15 ft)	lb			*25290	*25290	*17330	*17330					*9370	*9370	(19.3)

Lifting Capacities

R220LC-9A HIGH WALKER

Rating over-front Rating over-side or 360 degrees

Boom : 5.68 m (18′ 8″) / Arm : 3.90 m (12′ 10″) / Bucket : 0.92 m³ (1.20 yd³) SAE heaped / Shoe : 600 mm (24″) triple grouser

Load point height m (ft)		Load radius												At max. reach		
		1.5 m (5 ft)		3.0 m (10 ft)		4.5 m (15 ft)		6.0 m (20 ft)		7.5 m (25 ft)		9.0 m (30 ft)		Capacity		Reach
																m (ft)
9.0 m	kg													*2750	*2750	7.86
(30 ft)	lb													*6060	*6060	(25.8)
7.5 m	kg									*2220	*2220			*2810	*2810	9.06
(25 ft)	lb									*4890	*4890			*6190	*6190	(29.7)
6.0 m	kg									*2850	*2850			*2910	2550	9.85
(20 ft)	lb									*6280	*6280			*6420	5620	(32.3)
4.5 m	kg									*3140	*3140	*2180	*2180	*3030	2270	10.33
(15 ft)	lb									*6920	*6920	*4810	*4810	*6680	5000	(33.9)
3.0 m	kg							*4060	*4060	*3620	*3620	*2990	2840	3100	2120	10.54
(10 ft)	lb							*8950	*8950	*7980	*7980	*6590	6260	6830	4670	(34.6)
1.5 m	kg			*11630	*11630	*6880	*6880	*5070	*5070	*4190	3770	*3490	2730	3070	2090	10.50
(5 ft)	lb			*25640	*25640	*15170	*15170	*11180	*11180	*9240	8310	*7690	6020	6770	4610	(34.4)
Ground	kg	*5540	*5540	*10590	*10590	*8400	8100	*5960	5130	*4710	3590	*3480	2640	3180	2160	10.22
Line	lb	*12210	*12210	*23350	*23350	*18520	17860	*13140	11310	*10380	7910	*7670	5820	7010	4760	(33.5)
-1.5 m	kg	*7800	*7800	*11920	*11920	*9220	7800	*6540	4940	*5060	3480			3480	2370	9.67
(-5 ft)	lb	*17200	*17200	*26280	*26280	*20330	17200	*14420	10890	*11160	7670			7670	5220	(31.7)
-3.0 m	kg	*10330	*10330	*14530	*14530	*9340	7730	*6690	4870	5060	3450			*3920	2820	8.78
(-10 ft)	lb	*22770	*22770	*32030	*32030	*20590	17040	*14750	10740	11160	7610			*8640	6220	(28.8)
-4.5 m	kg	*13390	*13390	*13120	*13120	*8690	7840	*6230	4940					*4030	3800	7.41
(-15 ft)	lb	*29520	*29520	*28920	*28920	*19160	17280	*13730	10890					*8880	8380	(24.3)
-6.0 m	kg			*10090	*10090	*6720	*6720									
(-20 ft)	lb			*22240	*22240	*14820	*14820									

Boom : 5.68 m (18′ 8″) / Arm : 2.40 m (7′ 10″) / Bucket : 0.92 m³ (1.20 yd³) SAE heaped / Shoe : 800 mm (32″) triple grouser

Load point height m (ft)		Load radius										At max. reach		
		1.5 m (5 ft)		3.0 m (10 ft)		4.5 m (15 ft)		6.0 m (20 ft)		7.5 m (25 ft)		Capacity		Reach
														m (ft)
7.5 m	kg											*3700	*3700	7.31
(25 ft)	lb											*8160	*8160	(24.0)
6.0 m	kg							*4050	*4050			*3790	3570	8.30
(20 ft)	lb							*8930	*8930			*8360	7870	(27.2)
4.5 m	kg					*5360	*5360	*4580	*4580	*4260	4130	*3920	3110	8.87
(15 ft)	lb					*11820	*11820	*10100	*10100	*9390	9110	*8640	6860	(29.1)
3.0 m	kg					*7130	*7130	*5390	*5390	*4610	4010	*4080	2890	9.12
(10 ft)	lb					*15720	*15720	*11880	*11880	*10160	8840	*8990	6370	(29.9)
1.5 m	kg					*8720	8580	*6220	5500	*5020	3870	4110	2860	9.08
(5 ft)	lb					*19220	18920	*13710	12130	*11070	8530	9060	6310	(29.8)
Ground	kg			*9350	*9350	*9550	8290	*6790	5310	*5320	3780	4340	3020	8.75
Line	lb			*20610	*20610	*21050	18280	*14970	11710	*11730	8330	9570	6660	(28.7)
-1.5 m	kg	*10290	*10290	*14180	*14180	*9620	8230	*6950	5240			*4650	3450	8.07
(-5 ft)	lb	*22690	*22690	*31260	*31260	*21210	18140	*15320	11550			*10250	7610	(26.5)
-3.0 m	kg	*14760	*14760	*12990	*12990	*8950	8330	*6470	5310			*4690	4470	6.94
(-10 ft)	lb	*32540	*32540	*28640	*28640	*19730	18360	*14260	11710			*10340	9850	(22.8)
-4.5 m	kg			*10150	*10150	*7020	*7020							
(-15 ft)	lb			*22380	*22380	*15480	*15480							

Boom : 5.68 m (18′ 8″) / Arm : 2.92 m (9′ 7″) / Bucket : 0.92 m³ (1.20 yd³) SAE heaped / Shoe : 800 mm (32″) triple grouser

Load point height m (ft)		Load radius										At max. reach		
		1.5 m (5 ft)		3.0 m (10 ft)		4.5 m (15 ft)		6.0 m (20 ft)		7.5 m (25 ft)		Capacity		Reach
														m (ft)
7.5 m	kg											*3370	*3370	7.93
(25 ft)	lb											*7430	*7430	(26.0)
6.0 m	kg									*2700	*2700	*3460	3220	8.83
(20 ft)	lb									*5950	*5950	*7630	7100	(29.0)
4.5 m	kg							*4110	*4110	*3870	*3870	*3600	2820	9.37
(15 ft)	lb							*9060	*9060	*8530	*8530	*7940	6220	(30.7)
3.0 m	kg			*10440	*10440	*6440	*6440	*4960	*4960	*4290	4030	*3760	2640	9.60
(10 ft)	lb			*23020	*23020	*14110	*14110	*10930	*10930	*9460	8880	*8290	5820	(31.5)
1.5 m	kg			*8610	*8610	*8150	*8150	*5860	5520	*4760	3870	3760	2610	9.57
(5 ft)	lb			*18980	*18980	*17970	*17970	*12920	12170	*10490	8530	8290	5750	(31.4)
Ground	kg			*9870	*9870	*9260	8290	*6560	5300	*5150	3750	3940	2730	9.25
Line	lb			*21760	*21760	*20410	18280	*14460	11680	*11350	8270	8690	6020	(30.3)
-1.5 m	kg	*9210	*9210	*13090	*13090	*9600	8150	*6880	5180	*5300	3690	*4340	3060	8.62
(-5 ft)	lb	*20300	*20300	*28860	*28860	*21160	17970	*15170	11420	*11680	8140	*9570	6750	(28.3)
-3.0 m	kg	*12660	*12660	*13780	*13780	*9230	8200	*6670	5200			*4470	3810	7.59
(-10 ft)	lb	*27910	*27910	*30380	*30380	*20350	18080	*14700	11460			*9850	8400	(24.9)
-4.5 m	kg			*11470	*11470	*7860	*7860					*4250	*4250	5.89
(-15 ft)	lb			*25290	*25290	*17330	*17330					*9370	*9370	(19.3)

Lifting Capacities

R220LC-9A HIGH WALKER

Rating over-front Rating over-side or 360 degrees

Boom : 5.68 m (18′ 8″) / Arm : 3.90 m (12′ 10″) / Bucket : 0.92 m³ (1.20 yd³) SAE heaped / Shoe : 600 mm (24″) triple grouser

Load point height m (ft)		Load radius												At max. reach		
		1.5 m (5 ft)		3.0 m (10 ft)		4.5 m (15 ft)		6.0 m (20 ft)		7.5 m (25 ft)		9.0 m (30 ft)		Capacity		Reach
																m (ft)
9.0 m	kg													*2750	*2750	7.86
(30 ft)	lb													*6060	*6060	(25.8)
7.5 m	kg									*2220	*2220			*2810	*2810	9.06
(25 ft)	lb									*4890	*4890			*6190	*6190	(29.7)
6.0 m	kg									*2850	*2850			*2910	2620	9.85
(20 ft)	lb									*6280	*6280			*6420	5780	(32.3)
4.5 m	kg									*3140	*3140	*2180	*2180	*3030	2340	10.33
(15 ft)	lb									*6920	*6920	*4810	*4810	*6680	5160	(33.9)
3.0 m	kg							*4060	*4060	*3620	*3620	*2990	2920	*3180	2190	10.54
(10 ft)	lb							*8950	*8950	*7980	*7980	*6590	6440	*7010	4830	(34.6)
1.5 m	kg			*11630	*11630	*6880	*6880	*5070	*5070	*4190	3870	*3490	2820	3170	2160	10.50
(5 ft)	lb			*25640	*25640	*15170	*15170	*11180	*11180	*9240	8530	*7690	6220	6990	4760	(34.4)
Ground	kg	*5540	*5540	*10590	*10590	*8400	8310	*5960	5270	*4710	3700	*3480	2730	3280	2230	10.22
Line	lb	*12210	*12210	*23350	*23350	*18520	18320	*13140	11620	*10380	8160	*7670	6020	7230	4920	(33.5)
-1.5 m	kg	*7800	*7800	*11920	*11920	*9220	8010	*6540	5080	*5060	3580			3590	2450	9.67
(-5 ft)	lb	*17200	*17200	*26280	*26280	*20330	17660	*14420	11200	*11160	7890			7910	5400	(31.7)
-3.0 m	kg	*10330	*10330	*14530	*14530	*9340	7940	*6690	5010	*5090	3550			*3920	2900	8.78
(-10 ft)	lb	*22770	*22770	*32030	*32030	*20590	17500	*14750	11050	*11220	7830			*8640	6390	(28.8)
-4.5 m	kg	*13390	*13390	*13120	*13120	*8690	8050	*6230	5080					*4030	3910	7.41
(-15 ft)	lb	*29520	*29520	*28920	*28920	*19160	17750	*13730	11200					*8880	8620	(24.3)
-6.0 m	kg			*10090	*10090	*6720	*6720									
(-20 ft)	lb			*22240	*22240	*14820	*14820									

R220LC-9A LONG REACH

Rating over-front Rating over-side or 360 degrees

Boom : 8.2 m (26′ 11″) / Arm : 6.3 m (20′ 8″) / Bucket : 0.52 m³ (0.68 yd³) SAE heaped / Shoe : 800 mm (32″) triple grouser with 5,300 kg (11,680 lb) Counterweight

Load point height m (ft)		Load radius														At max. reach		
		4.5 m (15 ft)		6.0 m (20 ft)		7.5 m (25 ft)		9.0 m (30 ft)		10.5 m (35 ft)		12.0 m (40 ft)		13.5 m (45 ft)		Capacity		Reach
																		m (ft)
10.5 m	kg															*1480	*1480	12.11
(35 ft)	lb															*3260	*3260	(39.7)
9.0 m	kg											*930	*930			*1510	*1510	13.11
(30 ft)	lb											*2050	*2050			*3330	*3330	(43.0)
7.5 m	kg											*1550	*1550			*1550	1320	13.84
(25 ft)	lb											*3420	*3420			*3420	2910	(45.4)
6.0 m	kg									*1600	*1600	*1610	*1610			*1600	1160	14.37
(20 ft)	lb									*3530	*3530	*3550	*3550			* 3530	2560	(47.1)
4.5 m	kg									*1790	*1790	*1730	1720	*1260	*1260	*1660	1050	14.72
(15 ft)	lb									*3950	*3950	*3810	3790	*2780	*2780	*3660	2310	(48.3)
3.0 m	kg					*2520	*2520	*2220	*2220	*2020	*2020	*1880	1630	*1590	1220	*1720	980	14.89
(10 ft)	lb					*5560	*5560	*4890	*4890	*4450	*4450	*4140	3590	*3510	2690	*3790	2160	(48.9)
1.5 m	kg	*5620	*5620	*3940	*3940	*3090	*3090	*2590	*2590	*2270	2000	*2050	1530	*1790	1170	*1800	940	14.90
(5 ft)	lb	*12390	*12390	*8690	*8690	*6810	*6810	*5710	*5710	*5000	4410	*4520	3370	*3950	2580	*3970	2070	(48.9)
Ground	kg	*6990	6720	*4770	4490	*3620	3240	*2950	2430	*2510	1860	*2220	1440	*1820	1110	1880	930	14.75
Line	lb	*15410	14820	*10520	9900	*7980	7140	*6500	5360	*5530	4100	*4890	3170	*4010	2450	4140	2050	(48.4)
-1.5 m	kg	*7830	6210	*5390	4120	*4060	2990	*3260	2260	*2740	1740	*2380	1360	*1570	1070	1930	960	14.42
(-5 ft)	lb	*17260	13690	*11880	9080	*8950	6590	*7190	4980	*6040	3840	*5250	3000	*3460	2360	4250	2120	(47.3)
-3.0 m	kg	*8230	5990	*5780	3920	*4370	2830	*3490	2140	*2900	1660	*2490	1310			2030	1020	13.92
(-10 ft)	lb	*18140	13210	*12740	8640	*9630	6240	*7690	4720	*6390	3660	*5490	2890			4480	2250	(45.7)
-4.5 m	kg	*8310	5940	*5950	3830	*4540	2740	*3630	2070	*3000	1620	2510	1290			*2210	1140	13.20
(-15 ft)	lb	*18320	13100	*13120	8440	*10010	6040	*8000	4560	*6610	3570	5530	2840			*4870	2510	(43.3)
-6.0 m	kg	*8100	6010	*5900	3840	*4550	2730	*3640	2060	*2970	1620					*2340	1330	12.25
(-20 ft)	lb	*17860	13250	*13010	8470	*10030	6020	*8020	4540	*6550	3570					*5160	2930	(40.2)
-7.5 m	kg	*7580	6180	*5610	3930	*4350	2790	*3460	2120	*2740	1690					*2460	1670	10.97
(-25 ft)	lb	*16710	13620	*12370	8660	*9590	6150	*7630	4670	*6040	3730					*5420	3680	(36.0)
-9.0 m	kg	*6650	6460	*4980	4110	*3840	2940	*2930	2260									
(-30 ft)	lb	*14660	14240	*10980	9060	*8470	6480	*6460	4980									
-10.5 m	kg	*5040	*5040	*3730	*3730													
(-35 ft)	lb	*11110	*11110	*8220	*8220													

1. Lifting capacity is based on SAE J1097, ISO 10567.
2. Lifting capacity of the Robex Series does not exceed 75% of the tipping load with the machine on firm, level ground or 87% of full hydraulic capacity.
3. The load point is a hook located on the back of the bucket.
4. (*) indicates the load limited by hydraulic capacity.

Lifting Capacities

R220NLC-9A MONO BOOM

Rating over-front Rating over-side or 360 degrees

Boom : 5.65 m (18′ 6″) / Arm : 2.00 m (6′ 7″) / Bucket : 0.87 m³ (1.14 yd³) SAE heaped / Shoe : 500 mm (20″) triple grouser

Load point height m (ft)		Load radius								At max. reach		
		3.0 m (10 ft)		4.5 m (15 ft)		6.0 m (20 ft)		7.5 m (25 ft)		Capacity		Reach
												m (ft)
7.5 m	kg									*4050	3800	6.61
(25 ft)	lb									*8930	8380	(21.7)
6.0 m	kg					*4470	4360			*4120	2800	7.75
(20 ft)	lb					*9850	9610			*9080	6170	(25.4)
4.5 m	kg			*5730	*5730	*4890	4210			*4250	2340	8.41
(15 ft)	lb			*12630	*12630	*10780	9280			*9370	5160	(27.6)
3.0 m	kg			*7480	6130	*5650	3970	*4880	2740	4350	2130	8.71
(10 ft)	lb			*16490	13510	*12460	8750	*10760	6040	9590	4700	(28.6)
1.5 m	kg			*9040	5650	*6440	3730	*5240	2640	4300	2080	8.71
(5 ft)	lb			*19930	12460	*14200	8220	*11550	5820	9480	4590	(28.6)
Ground Line	kg			*9780	5440	*6980	3580	5340	2560	4540	2190	8.40
	lb			*21560	11990	*15390	7890	11770	5640	10010	4830	(27.6)
-1.5 m	kg	*14220	10460	*9740	5410	*7080	3540			*4980	2530	7.73
(-5 ft)	lb	*31350	23060	*21470	11930	*15610	7800			*10980	5580	(25.4)
-3.0 m	kg	*12730	10670	*8950	5520	*6440	3620			*4950	3360	6.58
(-10 ft)	lb	*28060	23520	*19730	12170	*14200	7980			*10910	7410	(21.6)

Boom : 5.65 m (18′ 6″) / Arm : 2.40 m (7′ 10″) / Bucket : 0.87 m³ (1.14 yd³) SAE heaped / Shoe : 500 mm (20″) triple grouser

Load point height m (ft)		Load radius										At max. reach		
		1.5 m (5 ft)		3.0 m (10 ft)		4.5 m (15 ft)		6.0 m (20 ft)		7.5 m (25 ft)		Capacity		Reach
														m (ft)
7.5 m	kg											*3740	3340	7.12
(25 ft)	lb											*8250	7360	(23.4)
6.0 m	kg							*4030	*4030			*3820	2530	8.18
(20 ft)	lb							*8880	*8880			*8420	5580	(26.8)
4.5 m	kg					*6900	6220	*4510	4250	*4090	2850	*3950	2140	8.80
(15 ft)	lb					*15210	13710	*9940	9370	*9020	6280	*8710	4720	(28.9)
3.0 m	kg					*8590	5690	*5310	3990	*4600	2740	4050	1950	9.09
(10 ft)	lb					*18940	12540	*11710	8800	*10140	6040	8930	4300	(29.8)
1.5 m	kg					*9560	5410	*6160	3730	*5020	2620	4000	1910	9.08
(5 ft)	lb					*21080	11930	*13580	8220	*11070	5780	8820	4210	(29.8)
Ground Line	kg			*9030	*9030	*9560	5330	*6800	3550	5300	2520	4190	2000	8.79
	lb			*19910	*19910	*21080	11750	*14990	7830	11680	5560	9240	4410	(28.8)
-1.5 m	kg	*9880	*9880	*13740	10260	*9750	5400	*7030	3480			*4710	2270	8.16
(-5 ft)	lb	*21780	*21780	*30290	22620	*21500	11900	*15500	7670			*10380	5000	(26.8)
-3.0 m	kg	*14280	*14280	*13430	10450	*9200	5400	*6670	3520			*4790	2920	7.09
(-10 ft)	lb	*31480	*31480	*29610	23040	*20280	11900	*14700	7760			*10560	6440	(23.3)
-4.5 m	kg			*10820	*10820	*7500	5640							
(-15 ft)	lb			*23850	*23850	*16530	12430							

Boom : 5.65 m (18′ 6″) / Arm : 2.92 m (9′ 7″) / Bucket : 0.87 m³ (1.14 yd³) SAE heaped / Shoe : 500 mm (20″) triple grouser

Load point height m (ft)		Load radius										At max. reach		
		1.5 m (5 ft)		3.0 m (10 ft)		4.5 m (15 ft)		6.0 m (20 ft)		7.5 m (25 ft)		Capacity		Reach
														m (ft)
7.5 m	kg											*3400	2880	7.76
(25 ft)	lb											*7500	6350	(25.5)
6.0 m	kg									*2180	*2180	*3500	2250	8.73
(20 ft)	lb									*4810	*4810	*7720	4960	(28.6)
4.5 m	kg							*4020	*4020	*3860	2890	*3630	1920	9.30
(15 ft)	lb							*8860	*8860	*8510	6370	*8000	4230	(30.5)
3.0 m	kg			*9690	*9690	*6140	*6140	*4860	4040	*4260	2760	3700	1760	9.58
(10 ft)	lb			*21360	*21360	*13540	*13540	*10710	8910	*9390	6080	8160	3880	(31.4)
1.5 m	kg			*9170	*9170	*7980	5780	*5790	3750	*4750	2610	3650	1710	9.57
(5 ft)	lb			*20220	*20220	*17590	12740	*12760	8270	*10470	5750	8050	3770	(31.4)
Ground Line	kg			*9770	*9770	*9220	5410	*6540	3540	*5170	2500	3800	1780	9.29
	lb			*21540	*21540	*20330	11930	*14420	7800	*11400	5510	8380	3920	(30.5)
-1.5 m	kg	*8900	*8900	*12810	10100	*9690	5270	*6940	3430	5200	2440	4220	2000	8.71
(-5 ft)	lb	*19620	*19620	*28240	22270	*21360	11620	*15300	7560	11460	5380	9300	4410	(28.6)
-3.0 m	kg	*12300	*12300	*14180	10240	*9440	5290	*6830	3430			*4540	2480	7.73
(-10 ft)	lb	*27120	*27120	*31260	22580	*20810	11660	*15060	7560			*10010	5470	(25.4)
-4.5 m	kg			*12070	10560	*8240	5460					*4420	3730	6.14
(-15 ft)	lb			*26610	23280	*18170	12040					*9740	8220	(20.1)

1. Lifting capacity is based on SAE J1097, ISO 10567.
2. Lifting capacity of the Robex Series does not exceed 75% of the tipping load with the machine on firm, level ground or 87% of full hydraulic capacity.
3. The load point is a hook located on the back of the bucket.
4. (*) indicates the load limited by hydraulic capacity.

Lifting Capacities

R220NLC-9A / HYDRAULIC ADJUSTABLE BOOM

Rating over-front Rating over-side or 360 degrees

Boom : 5.65 m (18′ 6″) / Arm : 2.00 m (6′ 7″) / Bucket : 0.87 m³ (1.14 yd³) SAE heaped / Shoe : 500 mm (20″) triple grouser

Load point height m (ft)		Load radius								At max. reach		
		3.0 m (10 ft)		4.5 m (15 ft)		6.0 m (20 ft)		7.5 m (25 ft)		Capacity		Reach
												m (ft)
10.5 m	kg									*5870	*5870	4.92
(35 ft)	lb									*12940	*12940	(16.1)
9.0 m	kg									*6770	*6770	4.30
(30 ft)	lb									*14930	*14930	(14.1)
7.5 m	kg			*6820	*6820					*5440	3930	6.48
(25 ft)	lb			*15040	*15040					*11990	8660	(21.3)
6.0 m	kg			*6920	*6920	*5980	4350			*5040	2850	7.64
(20 ft)	lb			*15260	*15260	*13180	9590			*11110	6280	(25.1)
4.5 m	kg	*11250	*11250	*7810	6730	*6250	4200			4810	2360	8.31
(15 ft)	lb	*24800	*24800	*17220	14840	*13780	9260			10600	5200	(27.3)
3.0 m	kg			*9040	6120	*6720	3950	*5460	2710	4440	2140	8.62
(10 ft)	lb			*19930	13490	*14820	8710	*12040	5970	9790	4720	(28.3)
1.5 m	kg			*9800	5620	*7070	3700	5430	2600	4390	2090	8.62
(5 ft)	lb			*21610	12390	*15590	8160	11970	5730	9680	4610	(28.3)
Ground	kg			*9580	5380	*7000	3540			*4250	2200	8.3
Line	lb			*21120	11860	*15430	7800			*9370	4850	(27.2)
-1.5 m	kg	*10550	10360	*8460	5360	*6270	3500			*3710	2560	7.62
(-5 ft)	lb	*23260	22840	*18650	11820	*13820	7720			*8180	5640	(25.0)
-3.0 m	kg			*6340	5480							
(10 ft)	lb			*13980	12080							

Boom : 5.65 m (18′ 6″) / Arm : 2.40 m (7′ 10″) / Bucket : 0.87 m³ (1.14 yd³) SAE heaped / Shoe : 500 mm (20″) triple grouser

Load point height m (ft)		Load radius								At max. reach		
		3.0 m (10 ft)		4.5 m (15 ft)		6.0 m (20 ft)		7.5 m (25 ft)		Capacity		Reach
												m (ft)
9.0 m	kg									*5860	*5860	5.13
(30 ft)	lb									*12920	*12920	(16.8)
7.5 m	kg			*5600	*5600					*5000	3440	7.00
(25 ft)	lb			*12350	*12350					*11020	7580	(23.0)
6.0 m	kg			*6440	*6440	*5550	4420			*4680	2580	8.07
(20 ft)	lb			*14200	*14200	*12240	9740			*10320	5690	(26.5)
4.5 m	kg	*10170	*10170	*7340	6860	*5960	4250	*3490	2820	4440	2160	8.70
(15 ft)	lb	*22420	*22420	*16180	15120	*13140	9370	*7690	6220	9790	4760	(28.5)
3.0 m	kg	*14030	11450	*8630	6230	*6490	3980	*5310	2710	4130	1960	9.00
(10 ft)	lb	*30930	25240	*19030	13730	*14310	8770	*11710	5970	9110	4320	(29.5)
1.5 m	kg			*9600	5660	*6930	3710	5420	2590	4070	1910	8.99
(5 ft)	lb			*21160	12480	*15280	8180	11950	5710	8970	4210	(29.5)
Ground	kg	*9790	*9790	*9670	5360	*7000	3510	*5300	2490	*4060	2010	8.69
Line	lb	*21580	*21580	*21320	11820	*15430	7740	*11680	5490	*8950	4430	(28.5)
-1.5 m	kg	*11850	10160	*8820	5280	*6480	3440			*3650	2300	8.05
(-5 ft)	lb	*26120	22400	*19440	11640	*14290	7580			*8050	5070	(26.4)
-3.0 m	kg	*8940	*8940	*7010	5360	*5050	3490					
(10 ft)	lb	*19710	*19710	*15450	11820	*11130	7690					

1. Lifting capacity is based on SAE J1097, ISO 10567.
2. Lifting capacity of the Robex Series does not exceed 75% of the tipping load with the machine on firm, level ground or 87% of full hydraulic capacity.
3. The load point is a hook located on the back of the bucket.
4. (*) indicates the load limited by hydraulic capacity.

STANDARD EQUIPMENT R220LC-9A / R220NLC-9A

ISO Standard cabin
- All-weather steel cab with 360° visibility
- Safety glass windows
- Rise-up type windshield wiper
- Sliding fold-in front window
- Sliding side window (LH)
- One key fits all lockable doors
- Hot & cool box
- Storage compartment & Ashtray
- Radio / MP3 Player with remote control and USB-input
- Handsfree mobile phone system with USB-charging device
- Transparent cabin roof-cover
- 12 volt power outlet (24V DC to 12V DC converter)
- Sun visor
- Rain guard - front window

Computer aided power optimization (CAPO) system
- 3-power modes, 2-work modes, User mode
- Auto & one-touch deceleration system
- Auto warm-up system
- Overheat prevention system

Automatic temperature control
- Air conditioner & heater
- Defroster

Self-diagnostics system

Starting Aid (air grid heater) for cold weather

Centralized monitoring
- LCD display
- Engine speed or Trip meter
- Clock
- Gauges
- Fuel level gauge
- Engine coolant temperature gauge
- Hyd. oil temperature gauge
- Warning lamps
- Engine warning
- Overload
- Communication error
- Low battery
- Air filter clogging
- Indicators
- Max power
- Low speed/High speed
- Fuel warmer
- Auto deceleration
- Rearview camera

Door and cab locks, one key

Three outside rearview mirrors

Mechanical suspension seat with heater

Adjustable joysticks

Console box tilting system

Four front working lights

Electric horn

Batteries (2 x 12V x 100 AH)

Battery master switch

Removable clean-out screen for coolers

Automatic swing brake

Fuel pre-filter with fuel warmer

Boom holding system

Arm holding system

Track shoes (600 mm; 24")

Track rail guard

Accumulator for lowering work equipment

Lower frame under cover

Viscous fan clutch

Fuel filler pump (50 ℓ/min)

Safety lock valve for boom cylinder with overload warning device

Double-acting piping kit (clamshell, etc.)

Travel alarm

Boom
- 5.68 m; 18'8"

Arm
- 2.92 m; 9'7"

Cabin ROPS (ISO 12117-2)
- ROPS (Roll Over Protective Structure)

Hi-mate (Remote Management System)

OPTIONAL EQUIPMENT R220LC-9A / R220NLC-9A

Beacon lamp

Safety lock valve for arm cylinder

Single-acting piping kit (breaker, etc.)

Quick coupler

Boom - R220LC-9A
- 5.68 m; 18'8" - Heavy duty
- 8.2 m; 26'11" - Long reach

Boom - R220NLC-9A
- 5.65 m; 18'6"
- 5.65 m; 18'6" - hydraulic adjustable

Arm - R220LC-9A
- 2.0 m; 6'7"
- 2.4 m; 7'10"
- 2.92 m; 9'7" Heavy duty
- 3.9 m; 12'10"
- 6.3 m, 20'8" Long reach

Arm - R220NLC-9A
- 2.0 m; 6'7"
- 2.4 m; 7'10"
- 2.92 m; 9'7" - not for hydraulic adjustable boom

Cabin FOPS/FOG (ISO/DIS 10262 Level II)
- FOPS (Falling Object Protective Structure)
- FOG (Falling Object Guard)

Cabin guard front
- Wire net
- Fine net

Cabin roof-steel cover

Cabin lights

Track shoes - R220LC-9A
- Triple grousers shoe (700 mm; 28")
- Triple grousers shoe (800 mm; 32")
- Triple grousers shoe (900 mm; 36")
- Double grousers shoe (700 mm; 28")
- Full track rail guard (High walker only)

Track shoes - R220NLC-9A
- Triple grousers shoe (500 mm; 20")
- Triple grousers shoe (600 mm; 25")
- Triple grousers shoe (700 mm; 28")

Additional lower frame - reinforced under cover

Seat
- Adjustable air suspension seat
- Adjustable air suspension seat with heater
- Mechanical suspension seat

Pattern change valve (2 patterns)

Air compressor

* Standard and optional equipment may vary. Contact your Hyundai dealer for more information. The machine may vary according to international standards.
* The photos may include attachments and optional equipment that are not available in your area.
* Materials and specifications are subject to change without advance notice.
* All imperial measurements rounded off to the nearest pound or inch.

PLEASE CONTACT

HYUNDAI
HEAVY INDUSTRIES EUROPE
CONSTRUCTION EQUIPMENT

Hyundai Heavy Industries Europe N.V.
VOSSENDAAL 11, 2440 GEEL, BELGIUM **TEL**: (32) 14-56-2200 FAX: (32) 14-59-3405